지시의 용융치수	지시의 모서리부분	지시되지 않은 치수의 허용차	구분	0.5 ~ 6	6 ~ 30	30 ~ 120	120 ~ 315	315 ~ 1000	1000 ~ 2000
q= 0.7T	지시되지 않은 모서리처리 C = 0.3~1.2 R = 0.3~1.2		급	±0.1	±0.2	±0.3	±0.5	±0.8	±1.2

표면거칠기								
Ra	25/	12.5/	6.3/	3.2/	1.6/	0.8/	0.2/	0.1/
Rmax	100S	50S	25S	12.5S	6.3S	3.2S	0.8S	0.4S
다듬질		▽		▽▽		▽▽▽		▽▽▽▽

MARK	REASONABLE REVISIONS	DATE	DRAWN	APPR'D
0				

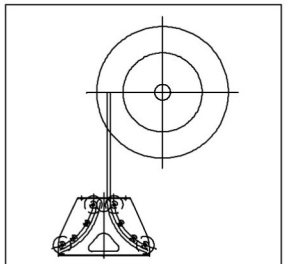

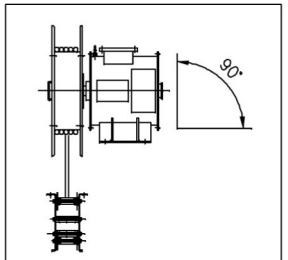

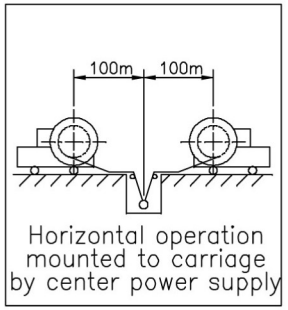

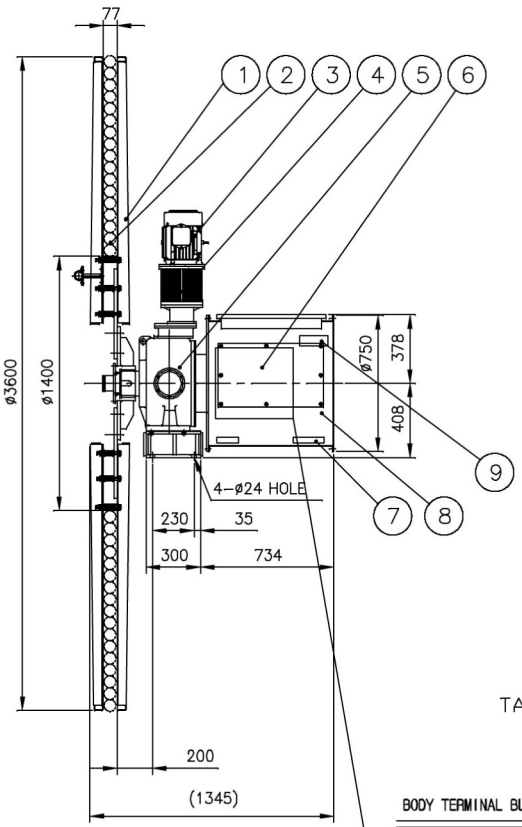

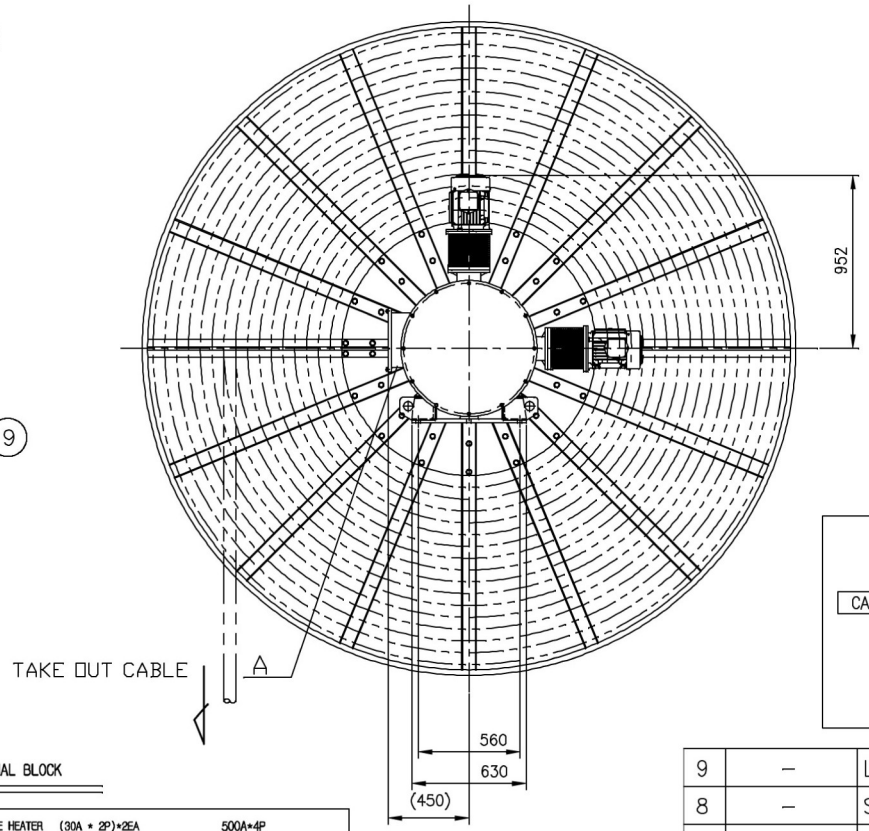

BODY TERMINAL BLOCK

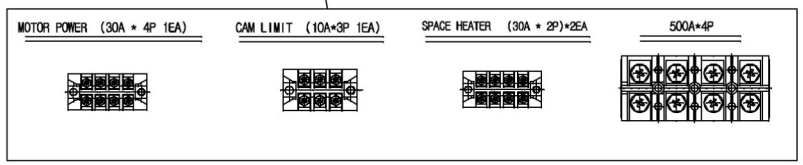

MAIN CABLE INLET

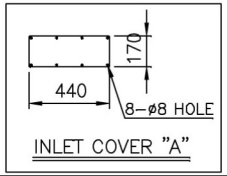

INLET COVER "A"

SLIP RING CONNECTION

CABLE	SLIPRING	TERMINAL IN BOX
95/3 mm÷	GROUNDING	95/3 mm÷ E
185 mm÷	600V / 500A	185 mm÷ R
185 mm÷	600V / 500A	185 mm÷ S
185 mm÷	600V / 500A	185 mm÷ T

SPECIFICATION

1. Cable
   - o TRDLRC 3c x 185sq + 3c x 95/3
   - o Size : approx. 65 mm
   - o Weight : approx. 8.38 kg/m
   - o Length : 125 M
2. Winding Length : 100 M
3. Winding Speed : max. 25 M/Min.
4. Motor Power Source : AC380V*3ph*50Hz
5. Main Power Source : AC380V*3ph*50Hz
6. Winding Torque : 130 Kg.m
7. Slip Ring : 500A x 3P + GROUNDING
8. Setting Height : Max. 3 m from G.L.
9. Acceleration Time : 3 sec.
10. Protection Class : IP55.
11. Feeding Method : Center Feeding Type
12. Paint Color : MUNSELL No. 7.5 BG6/1.5 (Out Door-120um)
13. Q' ty : 1 Set

ITEM 순번	PART NO. 품번	PART NAME 품명	MATERIAL 재질	Q'ty 수량	REMARKS 비고
9	–	LIMIT SWITCH	–	1	1:50/4 CAM
8	–	SLIP RING CASE	SPHC	1	–
7	–	SPACE HEATER	–	2	150W,220V,50HZ
6	–	SLIP RING	C3771	4	
5	–	MAIN REDUCER	FCD450	1	
4	–	MAGNET COUPLER	AL	2	
3	–	MOTOR(IP65)	SEW	2	1.5KW 4P I/C F
2	–	CABLE	–	125M	
1	–	DRUM ASS'Y	SPHC	1	

PROJECTION	DIMENSION UNIT	SCALE	MODEL
3rd ANGLE	METRIC (mm)	1 : 35	SKMD1M2H-185125-4
CUSTOMER 고객			PART NAME ASS'Y
MODEL COLOR 제품 색상	M/NO. 7.5BG 6/1.5		PART NO. A458-1000 / REV. NO. 0

	DRAWING	DESIGN	CHECK	APPROVAL
SIGN		S.S.J		
DATE				

KOREEL®
KOREEL CO., Ltd.

A4(210X297)