Ordinary Type
Creep Hoist With Motor-Driven Trolley

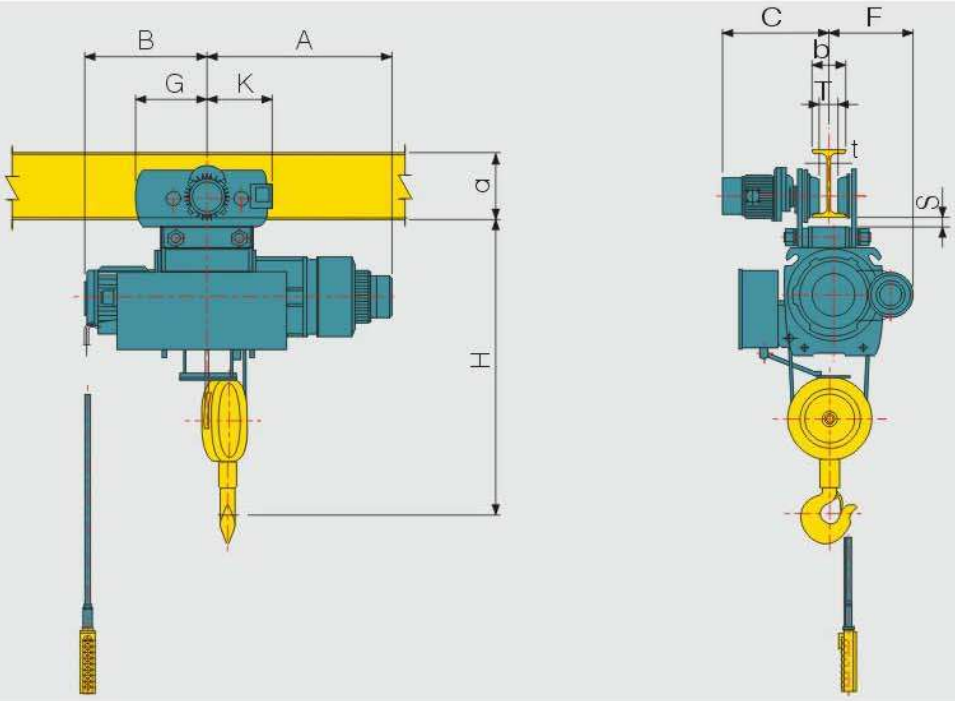

Tables of Dimensions

Capacity (ton)			1			2			2.8			3			5		
Model			KDWMC 1			KDWMC 2			KDWMC 2.8			KDWMC 3			KDWMC 5		
Hoisting Lift (m)			6(12)			6(12)			6(12)			6(12)			6(12)		
Hositing	Speed(m/min)	High/Creep speed 50Hz	10/1.0			8.4/0.84			7.5/0.75			7.5/0.75			4.7/0.47		
		High/Creep speed 60Hz	12/1.2			10/1			9/0.9			9/0.9			5.6/0.56		
	Motor(KwXP)	High speed	2.4 X 4			3.7 X 4			4.8 X 4			5.5 X 4			5.5 X 6		
		Creep speed	0.4 X 4			0.4 X 4			1.1 X 4			1.1 X 4			1.0 X 6		
	Brake		D.C Magnetic Disc Brake														
Traversing	Traversing Speed (m/min)	High speed 50/60(Hz)	20/24			20/24			20/24			20/24			20/24		
		Low speed 50/60(Hz)	13/16			13/16			13/16			13/16			13/16		
	Traversing Motor (KwXP)	High speed	0.4 X 4			0.75 X 4			0.75 X 4			0.75 X 4			0.75 X 4		
		Low speed	0.2 X 6			0.5 X 6			0.5 X 6			0.5 X 6			0.5 X 6		
Wire rope DIA(mm) No. Of Falls			8φX 2			10φX 2			12.5φX 2			12.5φX 2			16φX 2		
Approx. Dimensions(mm)		H	815			980			1115			1115			1325		
		A	595(615)			635(675)			760(770)			760(770)			840(850)		
		B	380(560)			430(590)			445(635)			445(635)			515(705)		
		F	375			380			445			445			470		
		G	255			260			260			260			275		
		K	200			225			225			225			275		
Dimensions with respect to I-beam		a X b X t	C	S	T	C	S	T	C	S	T	C	S	T	C	S	T
		I-200 X 100 X 7	400	39	46										-	-	-
		I-250 X 125 X 7.5	410	37	71	455	34	76	454	34	76	454	34	76	465	46	60
		I-300 X 150 X 10	425	32	96	465	32	95	465	32	95	465	32	95	480	40	85
Min curve of radius(m)			1.5			1.8			1.8			1.8			2.3		
Approx.Weight(kg)			225(245)			320(355)			415(460)			415(460)			635(700)		

※Note : 1) Figures in parentheses show hoists of 12m Lift.
2) Dimensions of I-beam in ■ sections are standard ones. Other I-beam also can be used by changing spacers.

[정밀수치를 요하는 현장은 당사에 사전 확인바랍니다. If minute dimension is required on the side. It should be informed to us in advance.

Ordinary Type
Creep Hoist With Motor-Driven Trolley

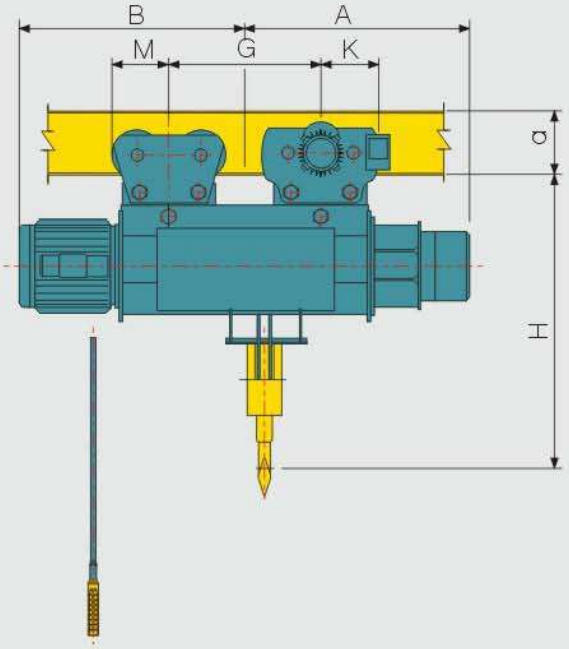

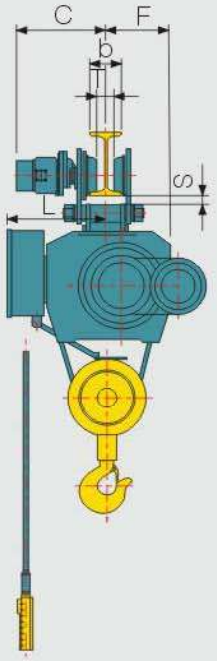

Tables of Dimensions

Capacity (ton)			7.5			10			15			20		
Model			KDWMC 7.5			KDWMC 10			KDWMC 15			KDWMC 20		
Hoisting Lift (m)			12			12			12			12		
Hositing	Speed(m/min)	High/Creep speed 50Hz	3.1/0.31			3.7/0.37			3.7/0.37			3.5/0.35		
		High/Creep speed 60Hz	3.8/0.38			4.5/0.45			4.5/0.45			4.2/0.42		
	Motor(KwXP)	High speed	5.5 X 6			9 X 8			13 X 8			17 X 8		
		Creep speed	1.0 X 6			1.1 X 8			1.8 X 8			1.8 X 8		
	Brake		D.C Magnetic Disc Brake											
Traversing	Traversing Speed (m/min)	High speed 50/60(Hz)	12.5/15			12.5/15			12.5/15			12.5/15		
		Low speed 50/60(Hz)	8.3/10			8.3/10			8.3/10			8.3/10		
	Traversing Motor (KwXP)	High speed	0.75 X 4 (2 units)			0.75 X 4 (2 units)			1.5 X 4 (2 units)			1.5 X 4 (2 units)		
		Low speed	0.5 X 6 (2 units)			0.5 X 6 (2 units)			1.0 X 6 (2 units)			1.0 X 6 (2 units)		
Wire rope DIA(mm) No. Of Falls			14Φ X 4			16Φ X 4			20Φ X 4			22.4Φ X 4		
Approx. Dimensions(mm)		H	1460			1520			1875			2115		
		A	1170			1225			1365			1460		
		B	835			955			1005			1195		
		F	505			570			620			660		
		L	465			530			615			640		
		G	800			800			800			850		
		M	250			250			270			270		
		K	275			275			300			300		
Dimensions with respect to I-beam		a X b X t	C	S	T	C	S	T	C	S	T	C	S	T
		I-300 X 150 X 10	480	35	68	480	35	68						
		I-400 X 175 X 13	495	32	93	495	32	93	580	25	77	580	25	77
		I-600 X 190 X 13	510	25	118	510	25	118	590	23	92	590	23	92
Min curve of radius(m)			For straight rail only											
Approx.Weight(kg)			970			1280			2180			2520		

※Note : 1) If curved rail requires, this must be indicated in advance.
2) Dimensions of I-beam in ▬ sections are standard ones. Other I-beam also can be used by changing spacers.

[정밀수치를 요하는 현장은 당사에 사전 확인바랍니다. If minute dimension is required on the side. It should be informed to us in advance.