MARK	REASONABLE REVISIONS	DATE	DRAWN	APPR'D

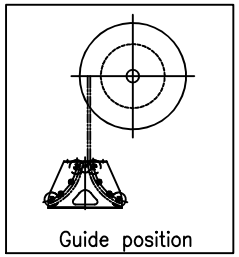

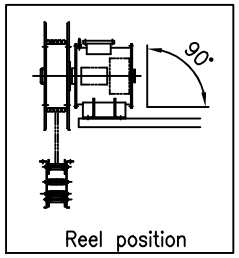

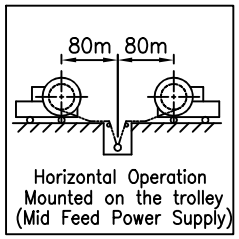

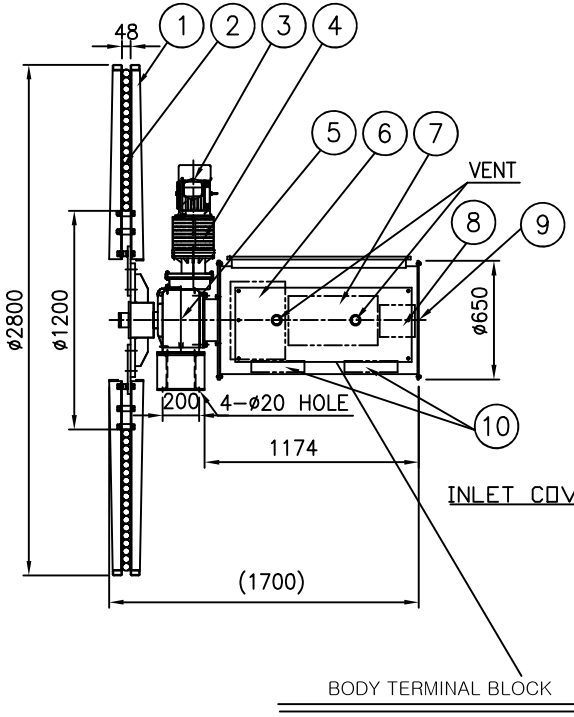

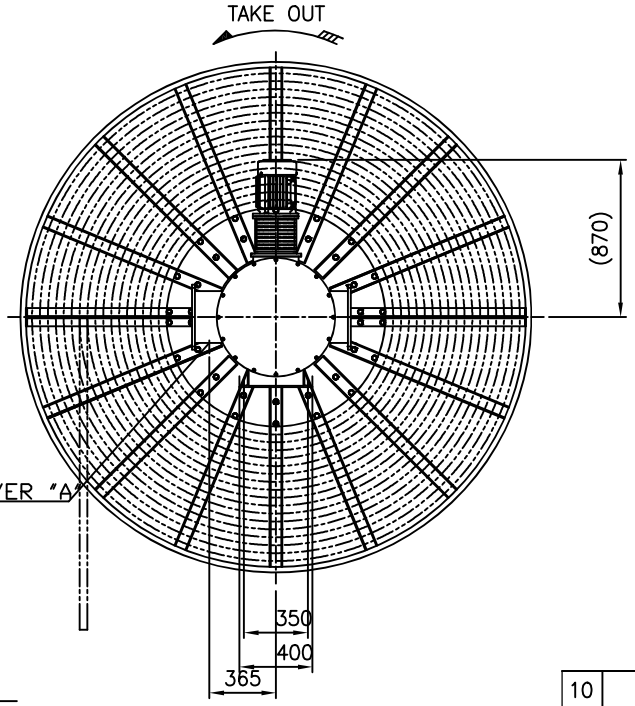

Main Cable Inlet

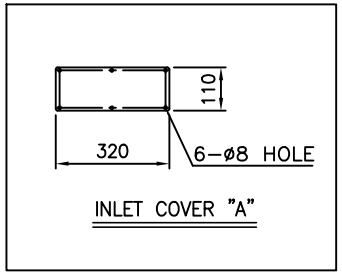

Slipring Connection

TERMINAL IN DRUM			SLIPRING		TERMINAL IN BOX		
100A*4P	R	25 mm²	600V / 100A	25 mm²	R	100A*4P	
	S	25 mm²	600V / 100A	25 mm²	S		
	T	25 mm²	600V / 100A	25 mm²	T		
10A*20P	E	25 mm²	GROUNDING	25 mm²	E	10A*20P	
	1~20	2.5 mm²	600V / 10A	2.5 mm²	1~20		

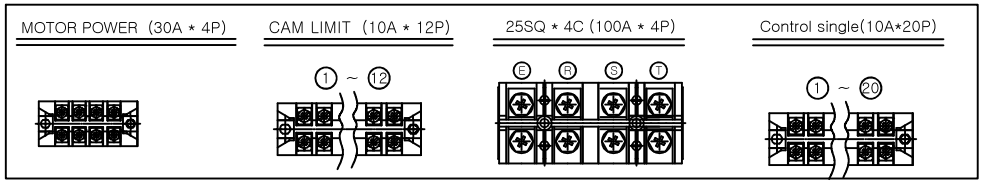

ITEM 순번	PART NO. 품 번	PART NAME 품 명	MATERIAL 재 질	Q'ty 수 량	REMARKS 비 고
10	–	SPACE HEATER	PUR	2	100W,220V,50HZ
9	–	SLIP RING CASE	SPHC	1	
8	–	LIMIT SWITCH	PUR	1	4CAM (3CAM USE POSSIBLE)
7	–	SLIP RING	C3771	20	10A
6	–	SLIP RING	C3771	4	100A
5	–	MAIN REDUCER	FCD450	1	
4	–	MAGNET COUPLER	AL	1	
3	–	MOTOR(ATEX Dust)	HYOSUNG	1	1.5KW 4P
2	–	CABLE	PUR	100M	
1	–	DRUM ASS'Y	SPHC	1	

PROJECTION 3rd ANGLE	DIMENSION UNIT METRIC (mm)	SCALE 1 : 40	MODEL EXSKMD1L1H-25S2S100-24
CUSTOMER 고 객	VIND		PART NAME –
MODEL COLOR 제품 색상	M/NO. 7.5BG 6/1.5		PART NO. B308-3000 / REV. NO. 0

	DRAWING	DESIGN	CHECK	APPROVAL
SIGN		S.S.J	J.J.H	O.W.H
DATE		2024.01.23	2024.01.23	2024.01.23

KOREEL
KOREEL CO., Ltd.

SPECIFICATION

1. Cable
   - o Spec. : HT-PNCT 25sq x 4c + 2.5sq x 20c
   - o Size : approx. 43 mm
   - o Weight : approx. 2.9 kg/m
   - o Length : 100 M
2. Winding Length : 80 M
3. Winding Speed : max. 15 M/Min.
4. Motor Power Source: AC400V*3ph*50Hz
5. Main Power Source : AC400V*3ph*50Hz
6. Winding Torque : 30 kg.m
7. Slip Ring : 100A x 3P + EARTH X 1P + 10A x 20P
8. Setting Height : Max. 2 M from G.L.
9. Acceleration Time 3 sec
10. Protection Class : Slipring Case : IP65. Cert.
11. Motor Explosion Proof: ATEX ZONE 22
    Slipring Case : ATEX ZONE 22
11. Feeding Method : Center Feeding Type
12. Paint Color : M/NO. 7.5BG 6/1.5-120um
13. Weight : ab. 1600kg(Without Cable)
14. Q' ty : 1 Set

A4(210X297)